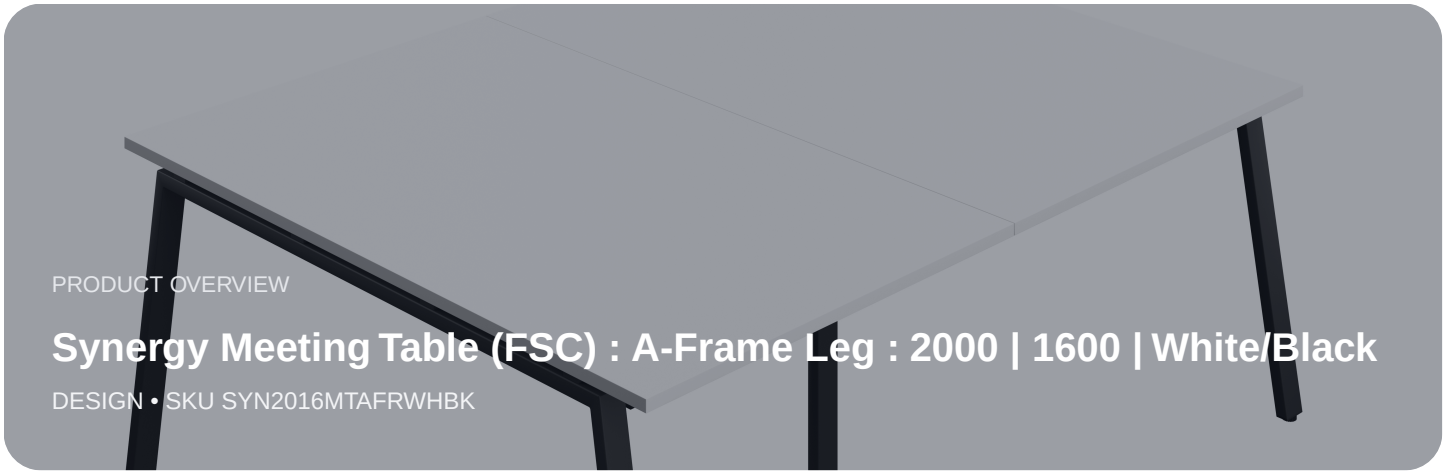

PRODUCT OVERVIEW

Synergy Meeting Table (FSC) : A-Frame Leg : 2000 | 1600 | White/Black

DESIGN • SKU SYN2016MTAFRWHBK

Synergy Meeting Table (FSC) : A-Frame Leg : 2000 | 1600 | White/Black

SKU	SYN2016MTAFRWHBK
Brand	DESIGN
Stock	In stock

PRICING

Sign in to view pricing.

Key Features

Important highlights of this product

- Sturdy, well-balanced metal frame design ensures stability
- Easily adaptable for various meeting sizes and setups
- Can be customised with power module cut outs
- Perfect for meeting, conference and breakout spaces

Description

Extended product overview

The Synergy A-Frame Meeting Table combines functionality with modern style, featuring a sleek A-frame structure and a sturdy, well-balanced metal frame for enhanced stability. Adaptable to various meeting sizes and setups, it can be customised with power module cutouts for added convenience. Perfect for meeting rooms, conference areas, and breakout spaces, this table offers a versatile solution for collaborative environments.